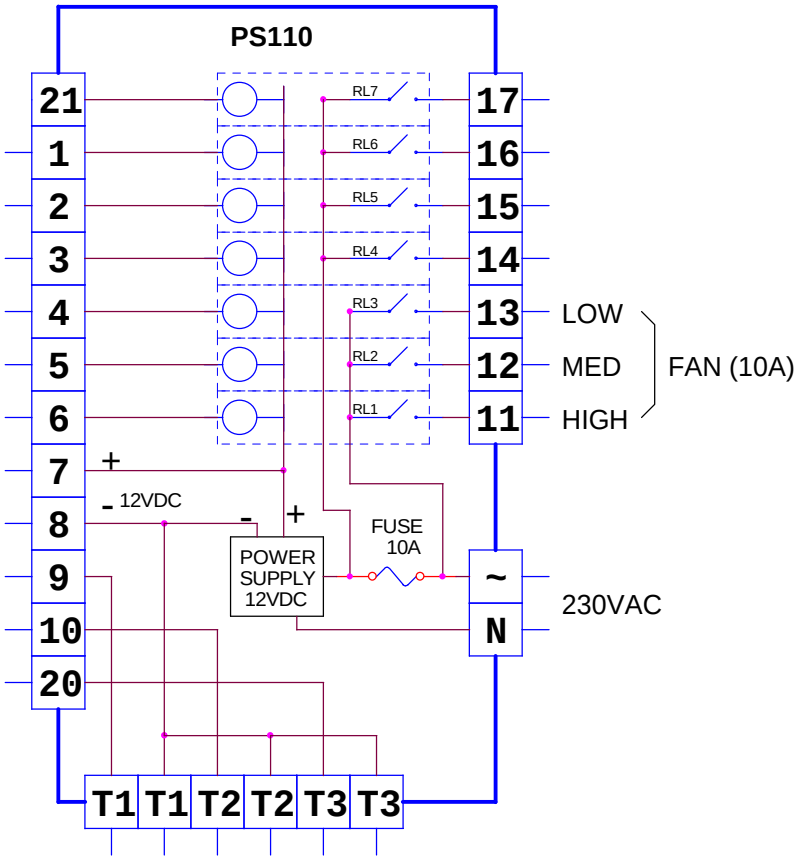

meitav-tec Tel: 03-9626462 Fax: 03-9626620 email: support@meitavtec.com	Title: **PS110**			Print name: PS-ACD	Drawn: Piki
				Software name:	Checked: A.Star
	Date: 15/06/2009	DWG No.		Check sum:	Approved: Israel
			No. Revision	Date	File name: PS110.DSN